ProSpex Soft70 Fixed

90mm (3.54”) overall trim diameter. 70mm (2.76”) overall trimless diameter. Available with standard trim kit or plaster-in kit for flush appearance. Family of matching products also available. Required depth height + 25mm^

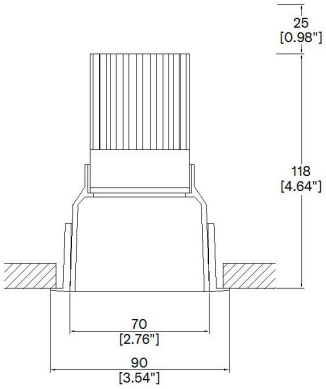

070-LED-TR
Cut-out 79mm Ø

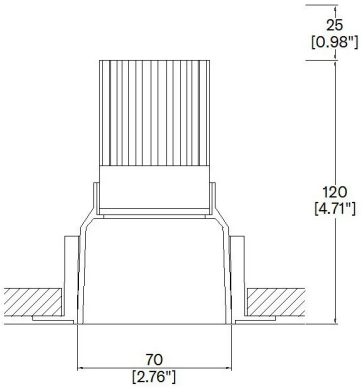

070-LED-TL
Cut-out 79mm Ø

LED Source	LED51/2	LED51/2	LED51/2
CCT	3000K	3000K	3000K
Drive Current	350mA	350mA	350mA
Power inc Driver	13.6W	13.6W	13.6W
Beam Angle	12°	24°	38°
Delivered Lumens	987	978	905
Delivered Intensisty cd	12665	4797	2369
Efficacy lm/w	73	72	67
Forward Volt	36V	36V	36V
CRI	≥90 CRI	≥90 CRI	≥90 CRI

Copyright © 2015 Lucent Lighting Ltd.

Project Ref:_____ Location Ref:_____

Fixture Order Code:

070-LED – [ ] – [ ] – [ ] – [ ] – [ ]

Fixture
070-LED — Soft70 Fixed with LED51

Installation
TR — Trim
TL — Trimless

Body Finish
WH — White
BK — Black
RAL — Custom RAL Colour*

Trim Finish (Leave blank if trimless)
WH — White
BK — Black
RAL — Custom RAL Colour*

IP Rating
44 — IP44

Emergency
E — Maintained 3hr Emergency
ED — Maintained 3hr DALI Self Test
ES — Maintained 3hr Self Test

LED Order Code:

LED51/2 – [ ] – [ ] – [ ]

LED
LED51/2 — LED50 ONE GEN2

CCT
927 — 90 CRI 2700K
930 — 90 CRI 3000K
940 — 90 CRI 4000K

Beam
12 — 12°
24 — 24°
38 — 38°

Protocol
S — Non-Dim
A — Analogue (0-10v)
P — Phase
D — DALI
B — Bluetooth**

Copyright © 2015 Lucent Lighting Ltd.

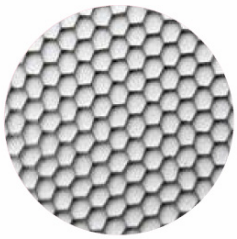

Honeycomb Louvre

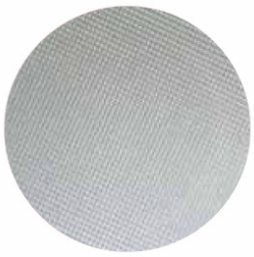

Diffusing Lens

Frosted Lens

Heavy Spread Lens

Linear Spread Lens

Warm Tone

Accessories Order Code:

Louvre/Lens

LL45	Honeycomb Louvre
LLCC	Warm Tone Lens
LLUV	UV Lens
LLDF	Diffusing Lens
LLFR	Frosted Lens
LLLS	Linear Spread Lens
LLHS	Heavy Spread Lens

Technical Details

*Custom RAL code must be specified. Custom RAL colours can increase prices and lead times

Dimming. Whilst Lucent can offer the majority of its luminaires with various dimming options, it remains the responsibility of the specifier/installer to check and ensure compatibility of any control equipment used. Additional cabling may be required depending on the dimming protocol specified.

**Bluetooth (wireless) is the communication method. The exact dimming protocol must be confirmed to allow the selection of suitable drivers or bluetooth devices.

^ Depth indicated is the minimum recess depth for the luminaire with a remote mounted LED driver. Installing a driver through either the luminaire cut-out or installation kit may require additional recess depth, please refer to the relevant luminaire installation instructions for further details.Data correct at time of publishing

First Fix Requirement. Luminaire comprised of fixture body with ceiling trim and installation kit, which is to be fitted into the ceiling once finished. Ensure correct alignment of the installation kit before final assembly (see luminaire instllation instructions for details)

IP Rating. Tested from underside of the ceiling

It is the policy of Lucent Lighting to continually review and improve its products and therefore reserve the right to change any details of product or withdraw specifications without prior notice.

Luminaires designed to comply with EN60598 and all other standards.

This specification sheet supersededs all previous versions.

All intellectual property rights pertaining to the product described above and to this document are owned by or licensed to Lucent Lighting Ltd.

We reserve the right to take whatever action is necessary to protect those intellectual property rights.

Please notify Lucent Lighting Ltd of any inaccuracies immediately. E&OE

lucent®

Light efficiency:

73 Lumen/Watt

Light quality:

CRI: 92.3

Color temperature:

3000 K

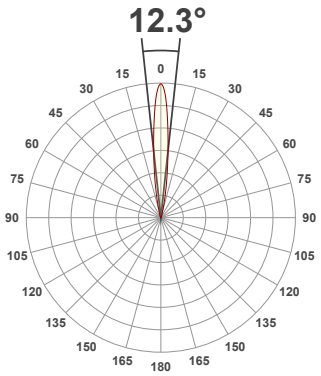

Product name:
Soft 70 Fixed - LED51 GEN2, 3000K, 12°, 350mA
Item number:
070-LED51/2-30-12-350mA

Delivered information for above fixture and LED combination.

Output: 987 Lumen Peak intensity: 12665 cd Power consumption: 13.6

CRI R values

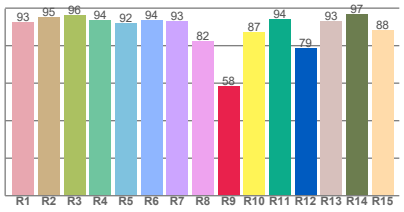

TM30 C Values

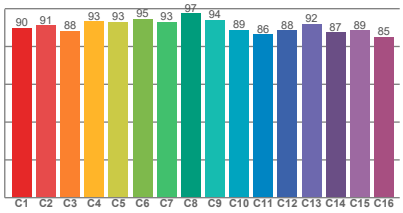

Color vector graphics

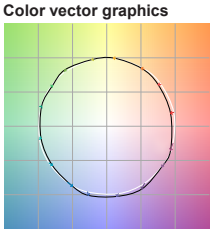

Color temperature	Color rendering index	Red component	Color fidelity	Color gamut	Color quality scale	Color coordinate cie 1931	Color coordinate cie 1931	Color coordinate	Color coordinate	Color diviation from black body
CCT	CRI	CRI R9	TM30 Rf	TM30 Rg	CQS	x	y	u	v	Δuv
3000 K	92.3	58.4	90.7	99.7	90.7	0.437	0.404	0.250	0.348	0.0008

Beam details

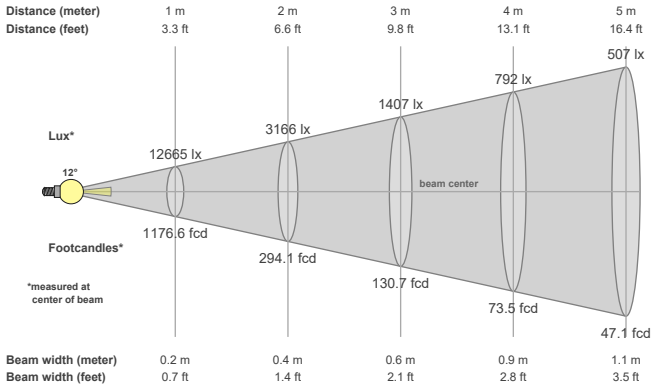

Beam angels

Beam angle 50%	Field angle 10%	Cutoff angle 2,5%
12.3°	25.9°	39.2°

Beam intensities

Peak intensity	Int. ratio in 120° cone	Int. ratio in 90° cone
12665 cd	97.7%	95.4%

Beam intensities from 1-20m

1m	2m	3m	4m	5m	6m	7m	8m	9m	10m	11m	12m	13m	14m	15m	16m	17m	18m	19m	20m
3.3ft	6.6ft	9.8ft	13.1ft	16.4ft	19.7ft	23ft	26.2ft	29.5ft	32.8ft	36.1ft	39.4ft	42.7ft	45.9ft	49.2ft	52.5ft	55.8ft	59.1ft	62.3ft	65.6ft
12665lx	3166lx	1407lx	792lx	507lx	352lx	258lx	198lx	156lx	127lx	105lx	88lx	75lx	65lx	56lx	49lx	44lx	39lx	35lx	32lx
1176.6fcd	294.1fcd	130.7fcd	73.5fcd	47.1fcd	32.7fcd	24fcd	18.4fcd	14.5fcd	11.8fcd	9.7fcd	8.2fcd	7fcd	6fcd	5.2fcd	4.6fcd	4.1fcd	3.6fcd	3.3fcd	2.9fcd

The above information is for 3000K colour temperature, for specific module information please see LED spec located on our website

For information regarding other colour temperatures please use the following factors for lumen output and candelas:

2700K = 1
4000K = 1.084

lucent®

Light efficiency:

72 Lumen/Watt

Light quality:

CRI: 92.3

Color temperature:

3000 K

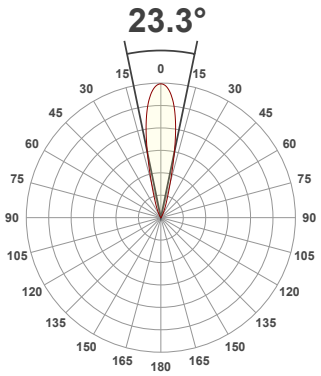

Product name:
Soft 70 Fixed - LED51 GEN2, 3000K, 24°, 350mA
Item number:
070-LED51/2-30-24-350mA

Delivered information for above fixture and LED combination.

Output: 978 Lumen Peak intensity: 4797 cd Power consumption: 13.6

CRI R values

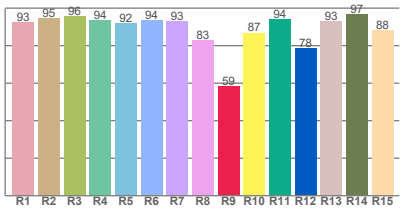

TM30 C Values

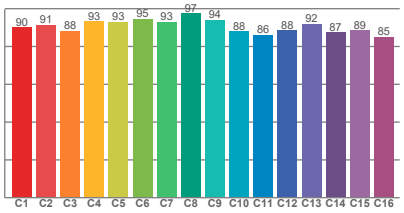

Color vector graphics

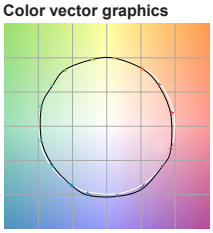

Color temperature	Color rendering index	Red component	Color fidelity	Color gamut	Color quality scale	Color coordinate cie 1931	Color coordinate cie 1931	Color coordinate	Color coordinate	Color diviation from black body
CCT	CRI	CRI R9	TM30 Rf	TM30 Rg	CQS	x	y	u	v	Δuv
3000 K	92.3	58.6	90.7	99.7	90.8	0.437	0.404	0.250	0.348	0.0010

Beam details

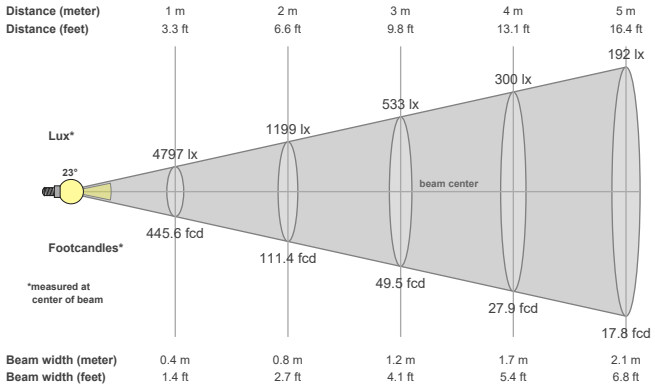

Beam angels

Beam angle 50%	Field angle 10%	Cutoff angle 2,5%
23.3°	42.2°	59.7°

Beam intensities

Peak intensity	Int. ratio in 120° cone	Int. ratio in 90° cone
4797 cd	98.2%	95.8%

Beam intensities from 1-20m

1m	2m	3m	4m	5m	6m	7m	8m	9m	10m	11m	12m	13m	14m	15m	16m	17m	18m	19m	20m
3.3ft	6.6ft	9.8ft	13.1ft	16.4ft	19.7ft	23ft	26.2ft	29.5ft	32.8ft	36.1ft	39.4ft	42.7ft	45.9ft	49.2ft	52.5ft	55.8ft	59.1ft	62.3ft	65.6ft
4797lx	1199lx	533lx	300lx	192lx	133lx	98lx	75lx	59lx	48lx	40lx	33lx	28lx	24lx	21lx	19lx	17lx	15lx	13lx	12lx
445.6fcd	111.4fcd	49.5fcd	27.9fcd	17.8fcd	12.4fcd	9.1fcd	7fcd	5.5fcd	4.5fcd	3.7fcd	3.1fcd	2.6fcd	2.3fcd	2fcd	1.7fcd	1.5fcd	1.4fcd	1.2fcd	1.1fcd

The above information is for 3000K colour temperature, for specific module information please see LED spec located on our website

For information regarding other colour temperatures please use the following factors for lumen output and candelas:

2700K = 1
4000K = 1.084

Light efficiency:

67 Lumen/Watt

Light quality:

CRI: 91.8

Color temperature:

3000 K

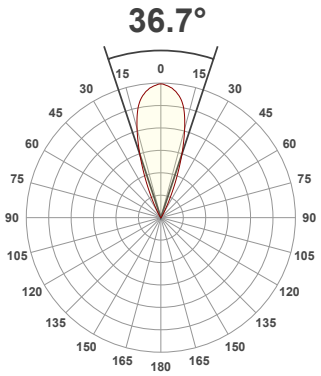

Product name:
Soft 70 Fixed - LED51 GEN2, 3000K, 38°, 350mA
Item number:
070-LED51/2-30-38-350mA

Delivered information for above fixture and LED combination.

Output: 905 Lumen Peak intensity: 2369 cd Power consumption: 13.6

CRI R values

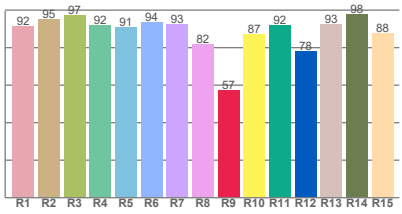

TM30 C Values

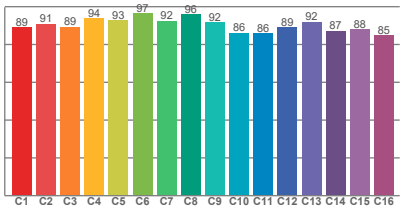

Color vector graphics

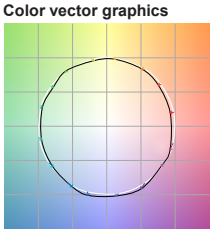

Color temperature	Color rendering index	Red component	Color fidelity	Color gamut	Color quality scale	Color coordinate cie 1931	Color coordinate cie 1931	Color coordinate	Color coordinate	Color diviation from black body
CCT	CRI	CRI R9	TM30 Rf	TM30 Rg	CQS	x	y	u	v	Δuv
3000 K	91.8	57.3	90.3	98.0	90.5	0.437	0.404	0.250	0.349	0.0014

Beam details

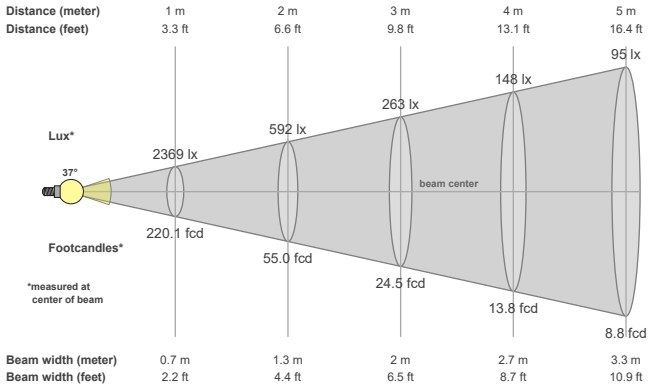

Beam angels

Beam angle 50%	Field angle 10%	Cutoff angle 2,5%
36.7°	54.1°	66.9°

Beam intensities

Peak intensity	Int. ratio in 120° cone	Int. ratio in 90° cone
2369 cd	98.6%	97.0%

Beam intensities from 1-20m

1m	2m	3m	4m	5m	6m	7m	8m	9m	10m	11m	12m	13m	14m	15m	16m	17m	18m	19m	20m
3.3ft	6.6ft	9.8ft	13.1ft	16.4ft	19.7ft	23ft	26.2ft	29.5ft	32.8ft	36.1ft	39.4ft	42.7ft	45.9ft	49.2ft	52.5ft	55.8ft	59.1ft	62.3ft	65.6ft
2369lx	592lx	263lx	148lx	95lx	66lx	48lx	37lx	29lx	24lx	20lx	16lx	14lx	12lx	11lx	9lx	8lx	7lx	7lx	6lx
220.1fcd	55fcd	24.5fcd	13.8fcd	8.8fcd	6.1fcd	4.5fcd	3.4fcd	2.7fcd	2.2fcd	1.8fcd	1.5fcd	1.3fcd	1.1fcd	1fcd	0.9fcd	0.8fcd	0.7fcd	0.6fcd	0.6fcd

The above information is for 3000K colour temperature, for specific module information please see LED spec located on our website

For information regarding other colour temperatures please use the following factors for lumen output and candelas:

2700K = 1
4000K = 1.084