ProSpex MiniTrim

TM65.2	10kgCO2e
TM66	2.3 CEAM

86mm (3.39”) overall diameter. Range of soft appearance with minimal trim for achieving trimless effect. Family of matching products also available.

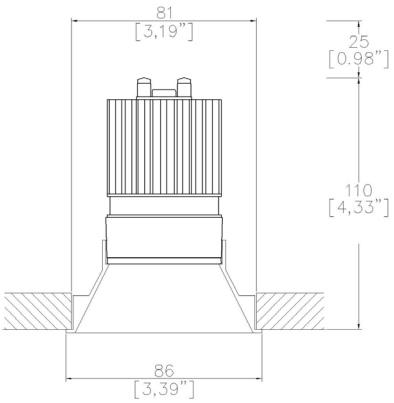

860-LED
Cut-out Ø 81mm
Required depth height + 25mm^

LED Source	LED51/3-TW		LED51/3-TW		LED51/3-TW	
CRI	≥90 CRI		≥90 CRI		≥90 CRI	
Drive Current	350mA		350mA		350mA	
Power inc Driver	15.4W		15.4W		15.4W	
Beam Angle	NF (21°)		FL (36°/33°)		WFL (59°/53°)	
Forward Volt	36V		36V		36V	
CCT	6527	4018	6527	4018	6527	4018
Delivered Lumens	1287	1127	1224	1086	1383	962
Delivered Intensisty cd	6724	5893	2927	2980	1344	1160
Delivered Lumens per circuit watt	83	73	79	70	90	62

Note: Performance data is based on the Highest CCT of each module type. Refer to the table on the last page for the factors.

Copyright © 2026 Lucent Lighting Ltd.

Project Ref:_____ Location Ref:_____

Fixture Order Code: 860-LED – [ ] – [ ]

Fixture

860-LED	MiniTrim Round Fixed with LED51

Finish

WH	White
BK	Black
RAL	Custom RAL Finish*
ABR1	Antique Brass
ABZ1	Antique Bronze
PCH1	Polished Chrome
PNK1	Polished Nickel
PBR1	Polished Brass

IP Rating

44	IP44

Module Order Code: LED51/3-TW – [ ] – [ ]

LED

LED51/3-TW	LED50 ONE Gen3 Dynamic Tuneable White

CCT

4018	4000K - 1800K
6527	6500K - 2700K

Beam

NF	Narrow Flood
FL	Flood
WFL	Wide Flood

Driver Options: [ ]

Protocol

D6	DALI Type 6**
D8	DALI Type 8**
B	Bluetooth***

Emergency Options: [ ]

Emergency

E	Maintained 3hr Emergency
ED	Maintained 3hr DALI Self Test
ES	Maintained 3hr Self Test

Copyright © 2026 Lucent Lighting Ltd.

Finish selection

Antique Brass

Antique Bronze

Polished Brass

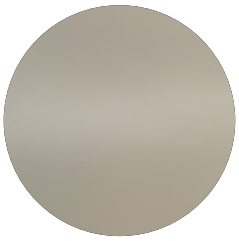

Polished Nickel

Polished Chrome

Accessories

Honeycomb Louvre

Diffusing Lens

Frosted Lens

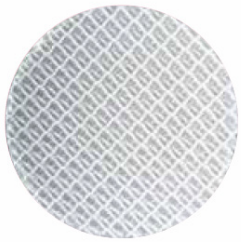

Heavy Spread Lens

Linear Spread Lens

Accessories Order Code:

Louvre/Lens

LL45	Honeycomb Louvre
LLDF	Diffusing Lens
LLFR	Frosted Lens
LLLS	Linear Spread Lens
LLHS	Heavy Spread Lens

Copyright © 2026 Lucent Lighting Ltd.

LED51/3-TW Factor and Wattage Information

All values given on page 1 and ies/ldt files are at the highest colour temperature. Use the below factors and wattages to calculate lumen output for other standard colour temperatures.

	LED51/3-TW-6527		LED51/3-TW-4018	
CCT	Lm Factor	System Wattage	Lm Factor	System Wattage
6500K	1.00	15.4		
5000K	1.06	14.7		
4000K	1.08	13.6	1.00	15.4
3000K	0.83	15.4	0.90	13.6
2700K	0.63	17	0.82	13.2
2400K			0.76	13.5
2200K			0.71	14
1800K			0.59	15.1

Technical Details

*Custom RAL code must be specified. Custom RAL colours can increase prices and lead times

Dimming. Whilst Lucent can offer the majority of its luminaires with various dimming options, it remains the responsibility of the specifier/installer to check and ensure compatibility of any control equipment used. Additional cabling may be required depending on the dimming protocol specified.

**DALI Type 6 requires two DALI addresses, one for CCT control the other for Intesisty control. DALI Type 8 is a single DALI Type 8 address for CCT and Intesisty control. Please check which control system is being used before specifying.

**Bluetooth (wireless) is the communication method. The exact dimming protocol must be confirmed to allow the selection of suitable drivers or bluetooth devices.

^ Depth indicated is the minimum recess depth for the luminaire with a remote mounted LED driver. Installing a driver through either the luminaire cut-out or installation kit may require additional recess depth, please refer to the relevant luminaire installation instructions for further details.Data correct at time of publishing

First Fix Requirement. Luminaire comprised of fixture body with ceiling trim and installation kit, which is to be fitted into the ceiling once finished. Ensure correct alignment of the installation kit before final assembly (see luminaire instllation instructions for details)

IP Rating. Tested from underside of the ceiling

Note that the picture of the finishes provided is for illustrative purposes only. The finishes may vary in colour, texture and appearance. Contact Lucent lighting Ltd for more information.

It is the policy of Lucent Lighting to continually review and improve its products and therefore reserve the right to change any details of product or withdraw specifications without prior notice.

Luminaires designed to comply with EN60598 and all other standards.

This specification sheet supersededs all previous versions.

All intellectual property rights pertaining to the product described above and to this document are owned by or licensed to Lucent Lighting Ltd.

We reserve the right to take whatever action is necessary to protect those intellectual property rights.

Please notify Lucent Lighting Ltd of any inaccuracies immediately. E&OE